SUSPENSION & PIN INSULATORS 24-36kV

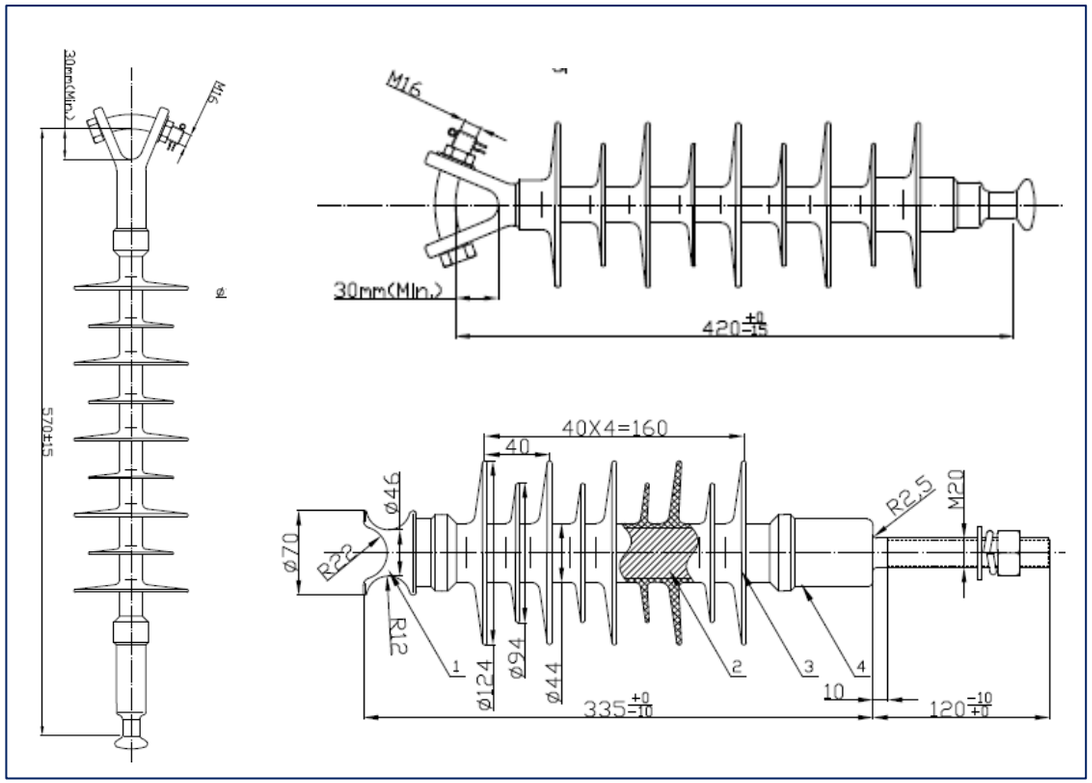

• **CABO VERDE** _ Year : 2.014 _ **5.310pcs**.